SMASH 200/12.7L

aselsan

12.7 MM REMOTE CONTROLLED STABILIZED GUN SYSTEM

#NavalSystems

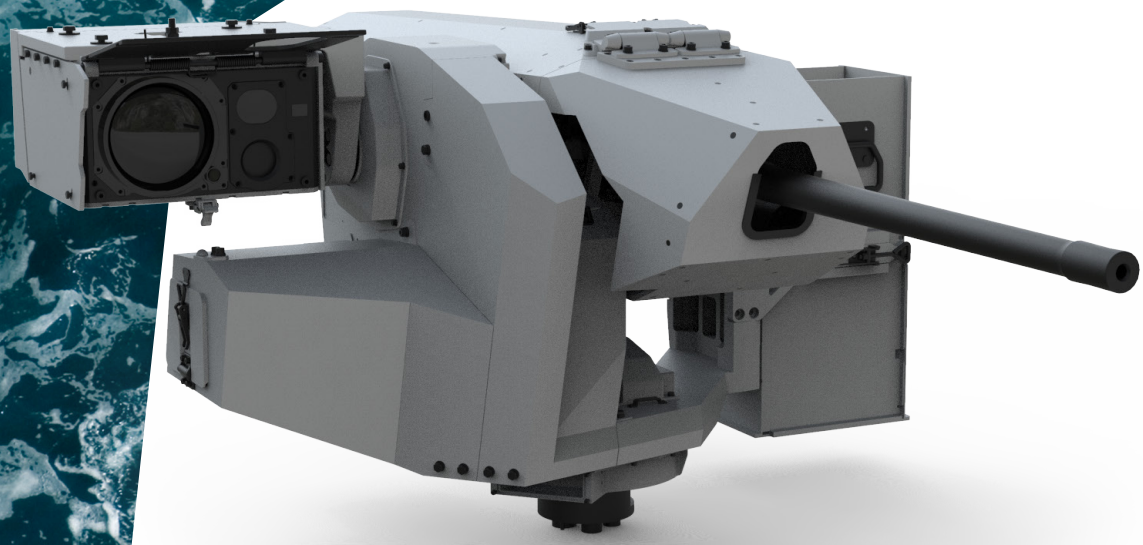

REMOTE CONTROL
HIGH ACCURACY STABILIZATION
AUTOMATIC BALISTIC CALCULATION
HIGH HIT PROBABILITY
EFFECTIVE AGAINST ASYMMETRIC THREATS

aselsan

SMASH 200/12.7L

aselsan

12.7 MM REMOTE CONTROLLED STABILIZED GUN SYSTEM

ASELSAN's remotely operated stabilized weapon system SMASH 200/12.7L combines low silhouette and lightweight with excellent firepower to serve tactical needs of warfare.

General Specifications
- Remote Control
- Automatic Ballistic Calculation
- High Hit Probability
- Day/night operation under various weather and terrain conditions
- High Accuracy Stabilization
- Integration with platform sensors (Radar, Wind Sensor, etc.)
- Manual Operation
- High Reliability
- Easy to integrate
- Back-up Battery Unit

Technical Description
- Turret weight: <210 kg (Including gun and ammunition)
- Gun Elevation Angle : -20° / +60°
- Gun Bearing Angle : n x 360° (with slip ring)
- Power Supply: 28 VDC (115 VAC and 220 VAC optional)
- Ammunition capacity: 200 pcs. (NATO 12.7x99mm)
- Maximum Speed: 60°/s (traverse & elevation)

Sub-Units
- Stabilized Turret
- System Display and Control Unit (12 inch Monitor)
- Commander Control Unit
- Electro Optic Unit
  - Thermal Camera
  - Day TV Camera
  - Laser Range Finder
- Integrated Control Unit
- Power Unit
- Slipring

Applications
- Effective protection against asymmetric threats
- Effective protection against terrorism and smuggling
- Coastal and base defense

Naval Platforms
- Warships
- Unmanned Naval Vessels
- Coast Guard Boats

Gun Options
- 12.7mm Machine Gun
- 7.62mm Machine Gun (Optional)



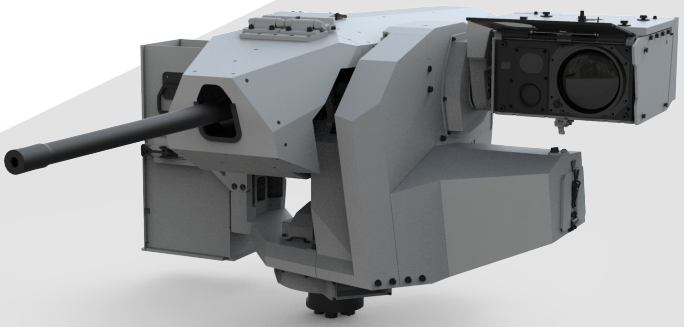

Specifications are subject to change without any notice. | All tolerances are within ±10%.

CALL CENTER +90 850 360 10 30 | P: +90 (312) 592 10 00 F: +90 (312) 354 13 02 | sstmarketing@aselsan.com

aselsan